PWT FL 250 C

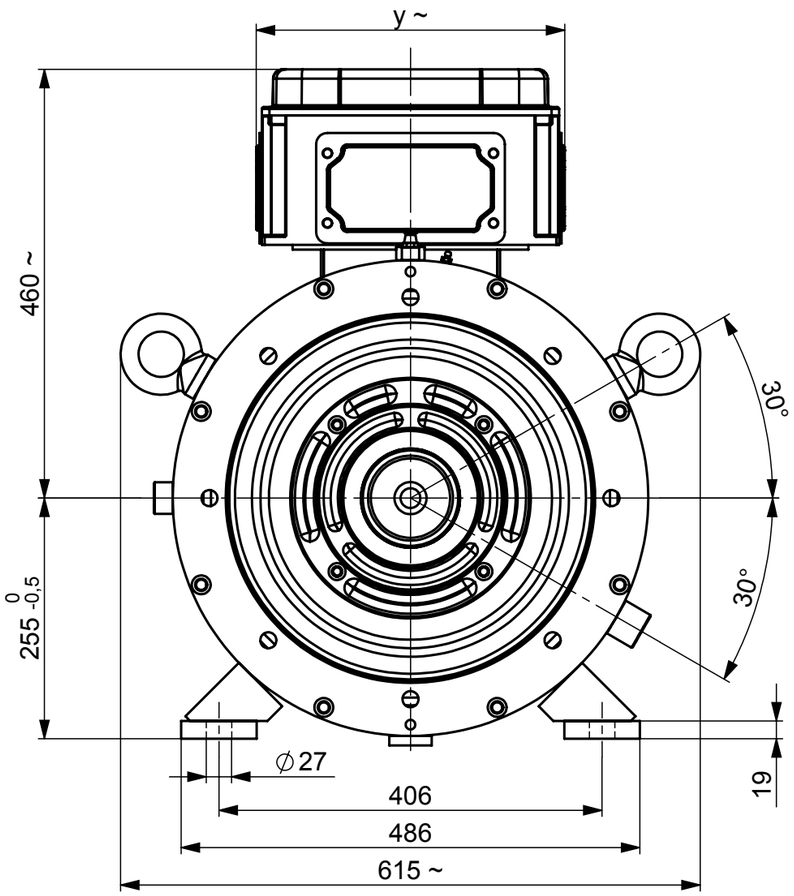

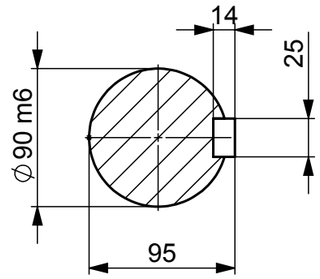

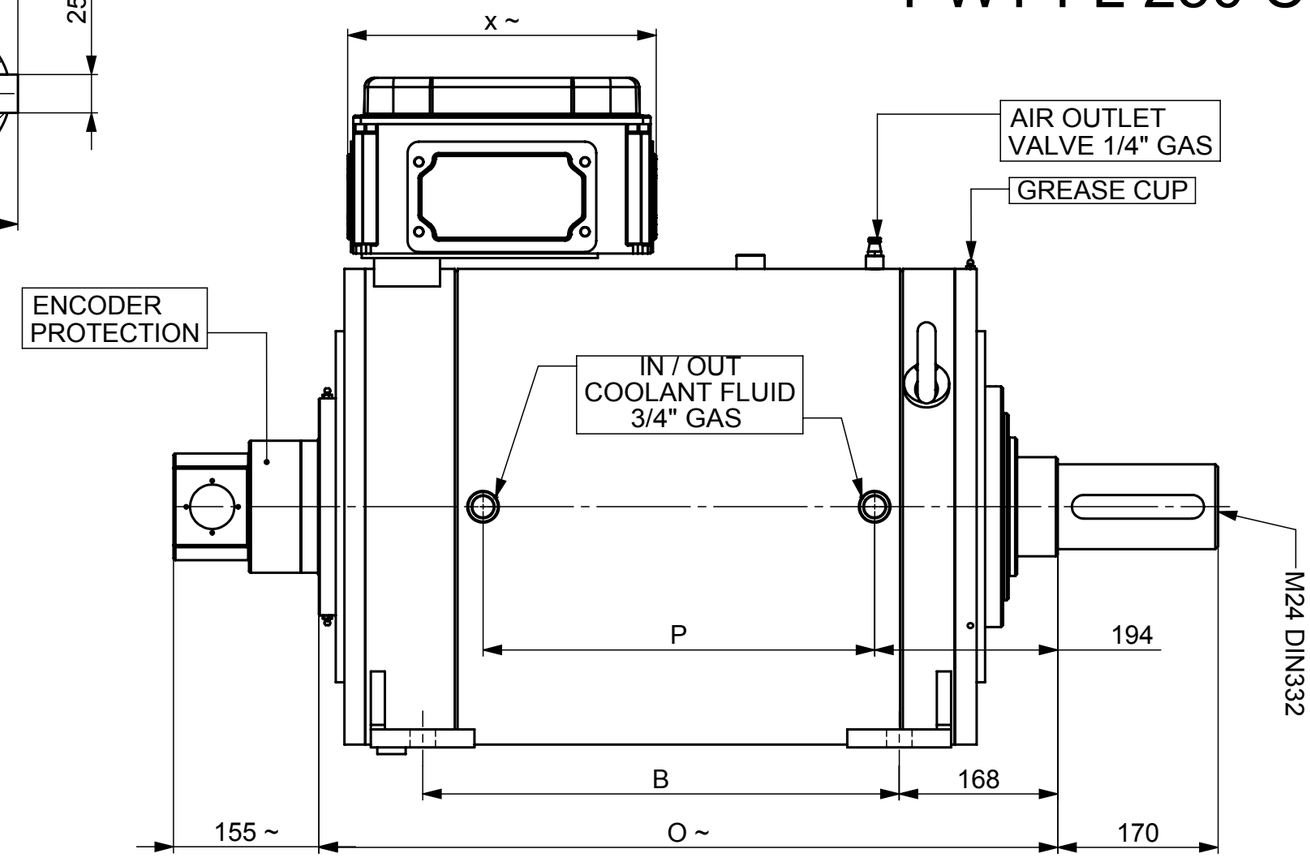

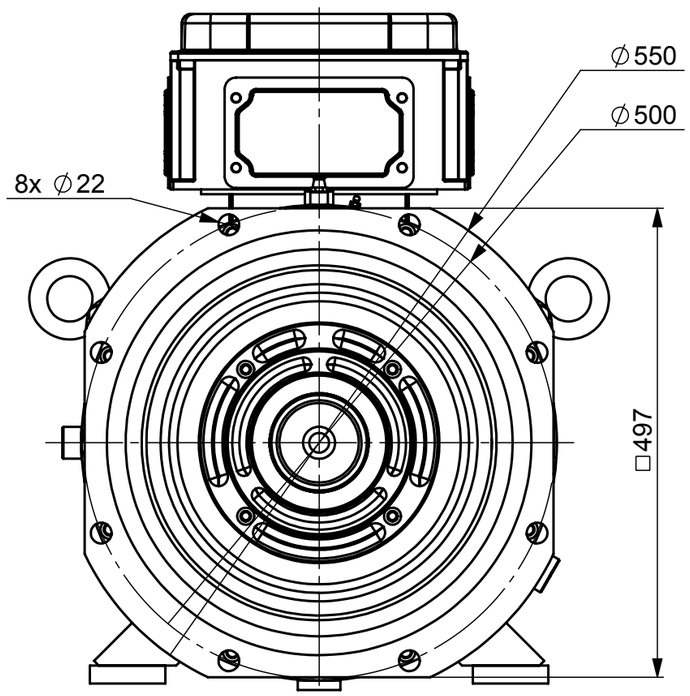

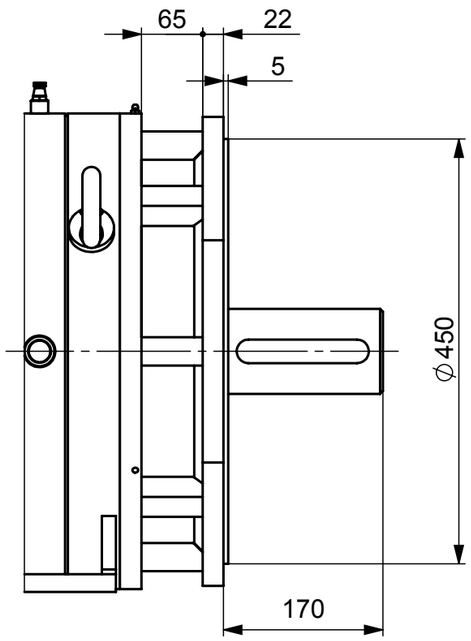

LOWEST FLOW
CIRCUIT OF COOLING:
30 l / min

PRESSURE DROP ON MOTOR
IN / OUT FLUID <= 3,5 bar.

TERMINAL BOARD		
	x	y
Till 500 A	330	330
Over 500 A	530	390

TYPE	B	O	P
PWTFL 250C.1	505	785	415
PWTFL 250C.2	575	855	485
PWTFL 250C.3	665	945	575
PWTFL 250C.4	785	1065	695
PWTFL 250C.5	925	1205	835

COMER S.r.l.